TABLE CE TRANSFORMER REPLACEMENT

PRODUCT INFORMATION BULLETIN #8060

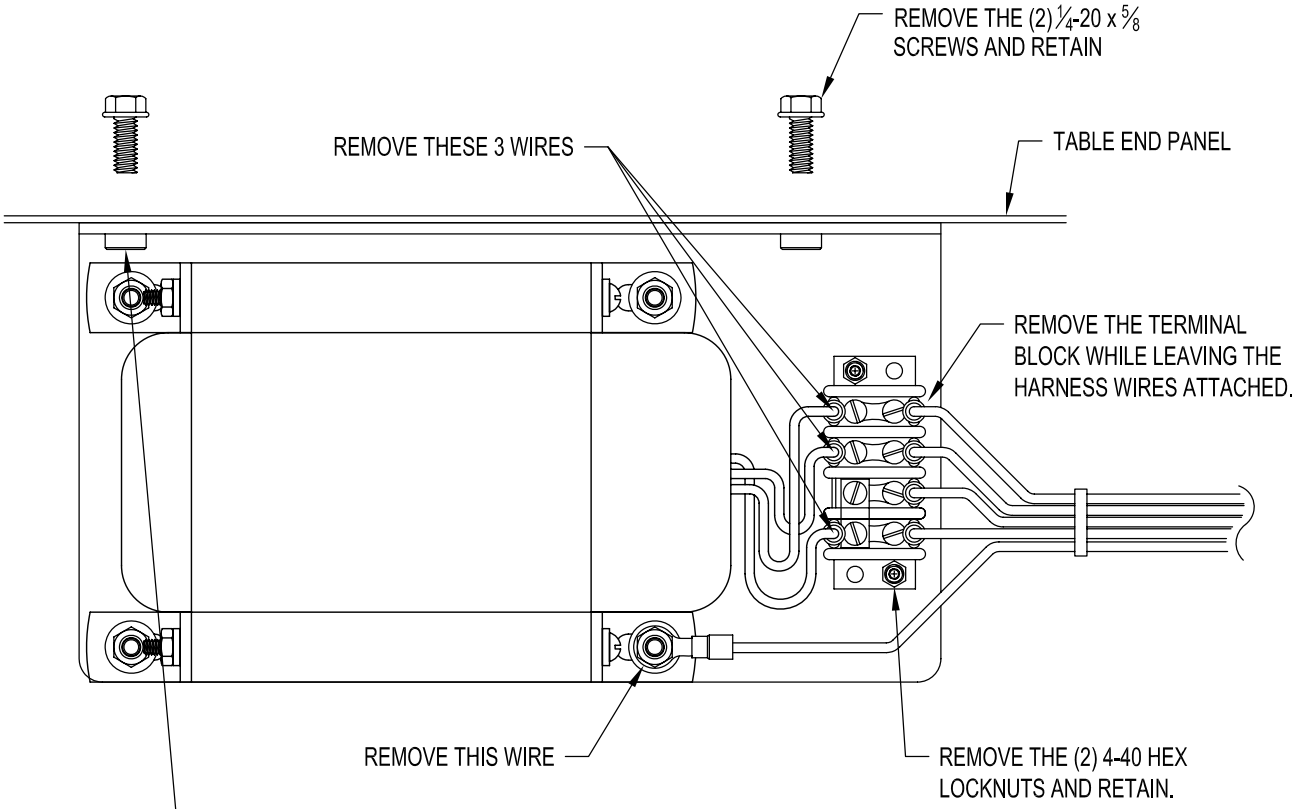

OLD TRANSFORMER BEING REPLACED

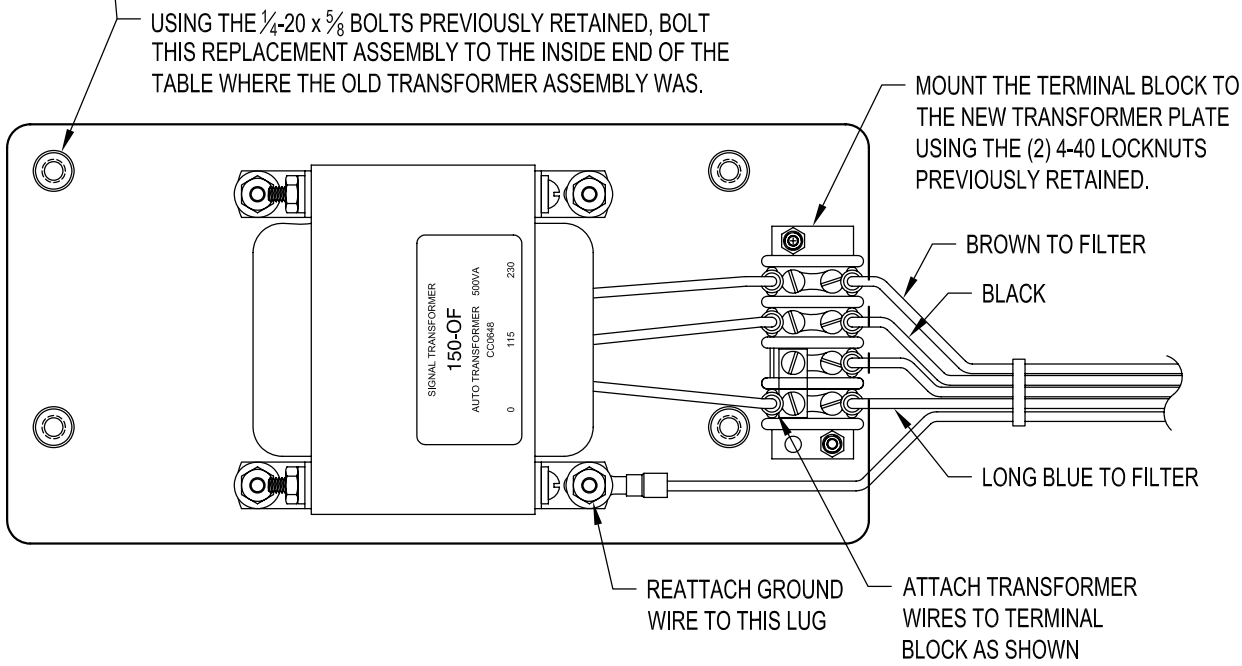

REPLACEMENT TRANSFORMER